YAS2/D2Z22——2A 700V SSR

概述 Features

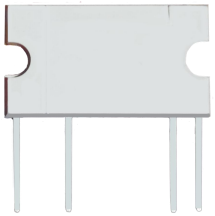

- 厚度3.0mm SSR　Thickness 3.0mm SSR
- 过零型　Zero-cross
- 负载电流至2A　Load current up to 2A
- 阻断电压700V　Repetitive peak off-state voltage 700V
- 介质耐压3000V　Dielectric strength 3000V
- 符合RoHS　RoHS compliant

获得认证 Agency approvals

- UL　- E481250
- cUL　- E481250

应用 Applications

- 家电产品（空调、冰箱、洗衣机、微波炉、卫浴等）
Home appliances (air conditioners, refrigerators, washing machines, microwave ovens, personal hygiene product etc.)
- LED灯控制　LED control
- 工业控制　Industrial control

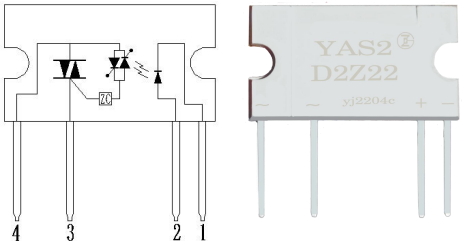

打印标志 Marking information

Part number	Package	Marking
YAS2/D2Z22	SIP4	YAS2 D2Z22

极限值 Absolute maximum ratings

(Ta=25℃)

特性参数/Parameter		符号/Symbol	测试条件/Test condition	最小值/Min.	典型值/Typ.	最大值/Max.	单位/Unit
输入端/Input	LED 反向电流/LED reverse current	V_R		6			V
	LED 正向电流/LED forward current	I_F				50	mA
输出端/Output	阻断电压/Repetitive peak off-state voltage	V_{DRM}/V_{RRM}		700			V
	额定电流/On-state RMS current	$I_{T(RMS)}$	I_{in}=10mA			2	A
	浪涌电流/Surge current	I_{TSM}	50Hz, 1 cycle		30		A
介质耐压/ I/O Dielectric strength *		V_{ISO}	I_{ISO}≤0.3mA	3000			V_{rms}
工作温度/Operating temperature		T_{opr}		-30		85	℃
储存温度/Storage temperature		T_{stg}		-40		125	℃

“*”： RH =40 to 60%, T=20~30℃,AC for 1minute.

电参数 Electrical parameters

特性参数/Parameter		符号 /Symbol	测试条件 /Test condition	最小值 /Min.	典型值 /Typ.	最大值 /Max.	单位 /Unit
输入端/Input	LED 正向电压 /LED forward voltage	V_F	I_F=10mA		1.2	1.3	V
	LED 反向电流/LED reverse current	I_R	V_R=5V			10	μA
输出端/Output	断态泄漏电流/Output off-state leakage current	I_{DRM}	V_{DRM} =700V			10	μA
	断态泄漏电流/Output off-state leakage current	I_{RRM}	V_{RRM} =700V			10	μA
	负载电压/Load voltage	V_{ac}		48		264	V
	电压指数上升率 /Critical rate of rise of off-state voltage	dv/dt	V_{DRM}=600V*1/√2	200			V/μs
	最小负载电流/Min. load current	I		100			mA
耦合特性 /Transfer characteristics	LED 触发电流/LED trigger current	I_{FT}			3	8	mA
	推荐的工作电流 /Recommend operating current	I_{in}		10		18	mA
	关断电压/ Must release voltage	V_{off}		1.2			V
	导通电压降/Output on-state voltage drop	V_T	I_{in}=10mA, I_L=2A V_D=6V		1.2	1.5	V
	过零电压/ Zero-cross voltage	V_{zc}	I_{in}=10mA, I_L=1200mA V_D=6V		15	30	V
	导通时间/Turn on time	T_{on}	I_{in}=10mA, V_D=6V, R_L=100Ω			1+1/2cycle	ms
	关断时间/Turn off time	T_{off}	I_{in}=10mA, V_D=6V, R_L=100Ω			1+1/2cycle	ms

安规要求 Safety and insulation ratings：

爬电距离	Creepage distance: 4.3mm, CTI ≥275;
瞬时过电压	Highest allowable overvoltage 4000V;
再现峰值电压	V_{IORM} 769V;
局部放电	Partial discharge test voltage:
	方法 b Method b, Vpd = V_{IORM} x 1.6 1230V.

外形尺寸 Outline dimension :mm

1、SIP4

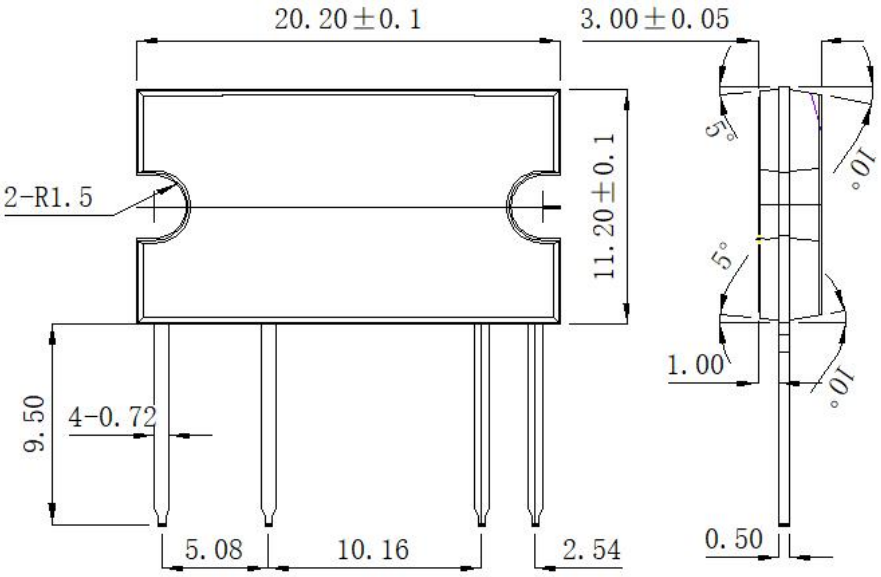

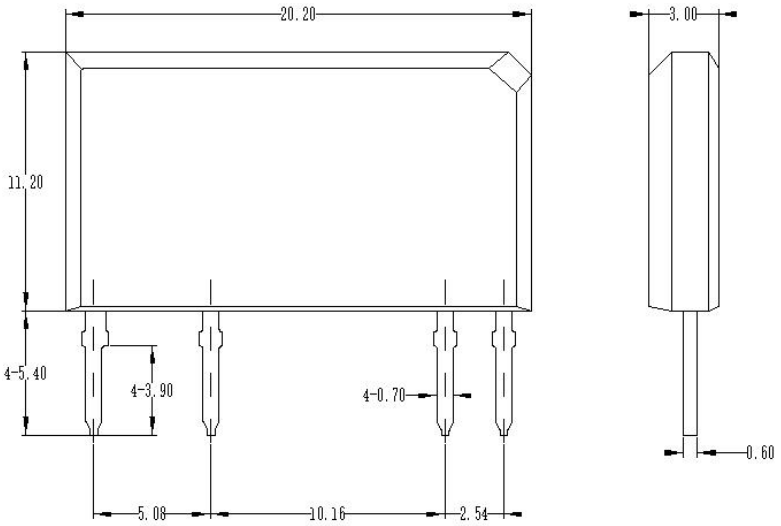

订货信息 Ordering information

订货信息/Ordering information

	Y	AS	2/	D	2	Z	22

- 公司商标代号 Company symbol
- 交流输出型 AC SSR
- 封装 Package：2：SIP4
- 输入端电流型 Current driving：D
- 负载电流 Load current：1-1A;1.2-1.2A;2-2A
- P:调相型 Non zero-cross Z:过零型 Zero-cross
- 负载电压 Load voltage：22:220Vac;38:380Vac

特性曲线 Characteristic data

1. 负载电流与环境温度关系曲线

Load current VS. ambient temperature

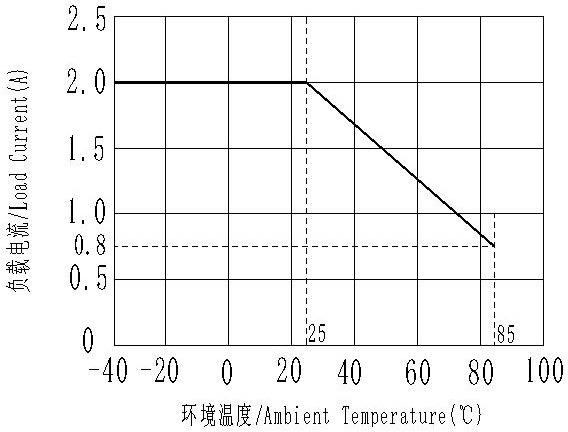

2. 导通压降—环境温度特性

On-state voltage drop VS. ambient temperature

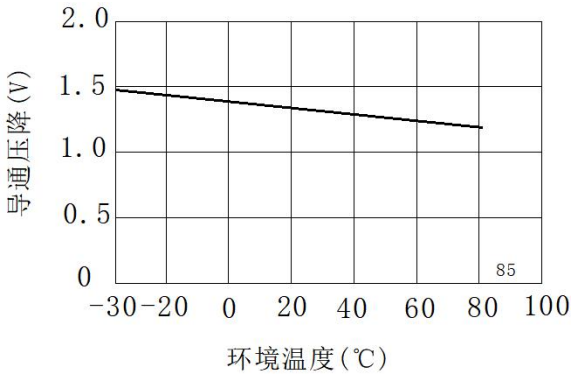

3. 重复峰值关断电流—负载电压

Repetitive peak turn off current—Load voltage

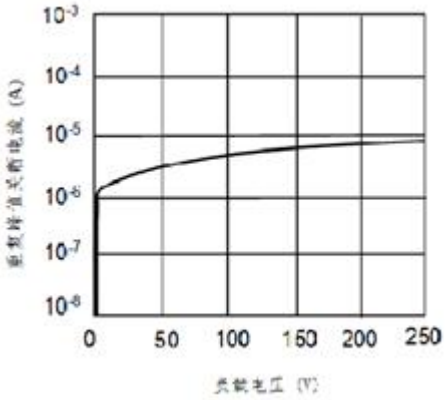

4. LED 导通压降—环境温度特性

LED dropout voltage vs. ambient temperature

LED current: 10 to 50 mA

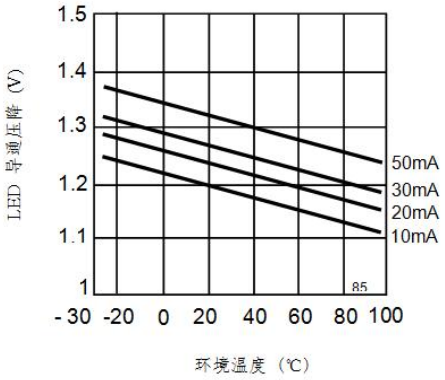

5. 导通时间—LED 电流特性

Turn on time vs. LED current

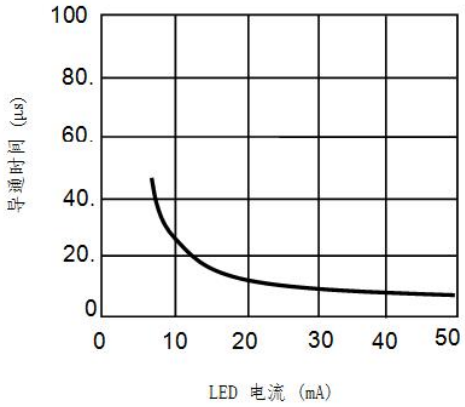

接通和关断时间关系 Turn on and turn off time

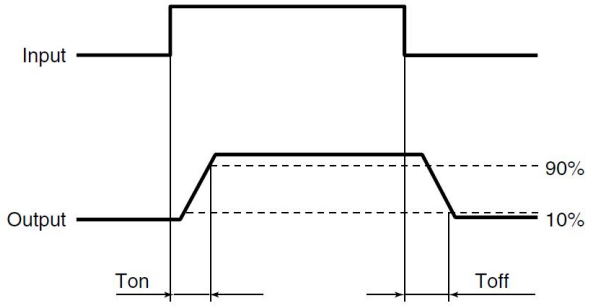

安装孔尺寸图 Fixing layout

Unit:mm

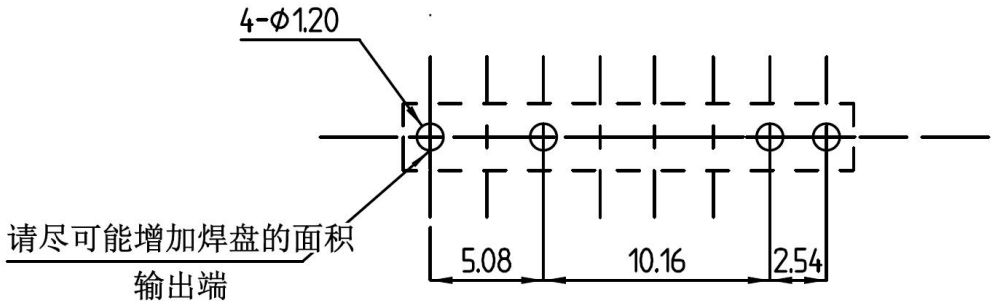

Please enlarge the solder pads of output.

注意事项 Notes

a) 工作环境温度超过 25℃时请降额使用。参见特性曲线 1。

When ambient temperature is above 25℃, the load current must be reduced. （see characteristic data ）

b) 继电器接线时，务必保证输入端极性的正确，以免损坏继电器。

Ensuring the polarity is correct when connecting the input lines, otherwise the wrong connection will damage the relay.

c) 由于 SSR 动作时间很短，输入端的噪声可能会引起 SSR 误动作，所以在输入端环境噪声较大时，应在输入端接 R/C 回路吸收噪声。
Since the operate time of the relay is extremely short, any noise to input terminal will cause malfunction of the SSR, So a RC circuit should be connected to input terminal to absorb the noise in the noisy condition.

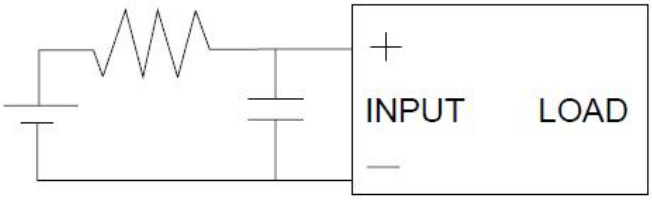

d) 推荐的使用电路，输出端的尖峰电压可能会引起 SSR 误动作，所以请在输出端应加 R/C 回路或压敏电阻吸收尖峰电压，具体见下图：
Below shows a recommend circuit: Please add a RC circuit or varistor on the load side, as noise/surge could damage the unit or cause malfunctions.

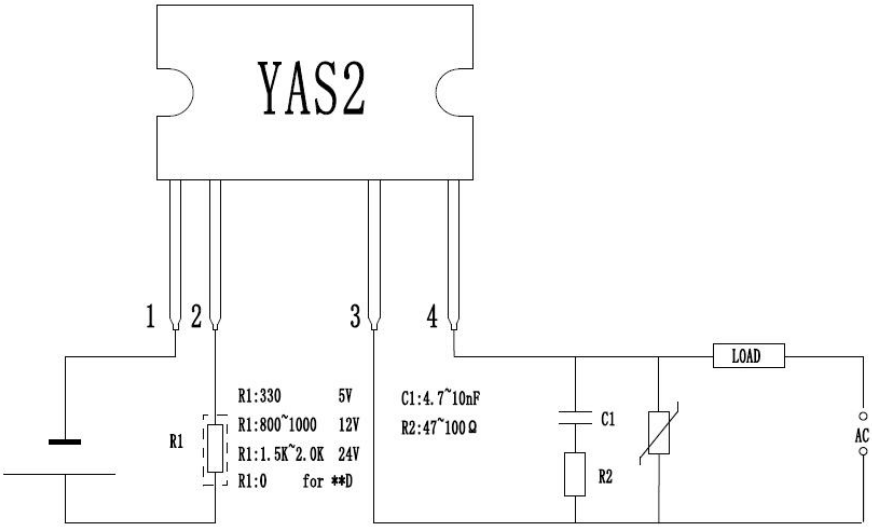

关于防静电对策 Cautions for static electricity

a. 使用电烙铁时，对电烙铁前端进行接地。(建议使用低电压用的电烙铁。) When using soldering irons, either use irons with low leakage current, or ground the tip of the soldering iron. (Use of low-voltage soldering irons is also recommended.)
b. 组装时使用的设备等也应正确的接地。Devices and equipment used in assembly should also be grounded.

关于焊接 Soldering

继电器焊接，260℃情况下焊接时间不能超过 10 秒钟，350℃情况下焊接时间不能超过 5 秒钟。
Soldering must be completed within 10 seconds at 260℃ or within 5 seconds at 350℃.